POWERLINK
Power Systems

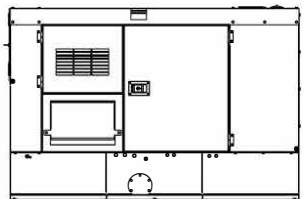

Generator set

Sound-proof type

QSV180CS

SPECIFICATIONS

www.powerlinkworld.com

MC series
QSV180CS

50 Hz @ 1500rpm,3-phase/4-wiring

1 Standards & Conditions

Design Standards

The designs and the productions are in conformity with:

- Conformite Europeenne (CE)
- ISO8528-5:2005
- GB/T2820.5-2009

.

Environmental Operating Conditions

- Installation place: Outdoors or indoors (well ventilated).
- Ambient temperature: -25℃ to 50℃.The coolant heater is needed when the temperature is below 5℃
- Humidity: Less than 90%.
- Altitude: Below one thousand (1000) meters above sea level.

Factory Inspection

- Inspection items.
- Protection devices working test.
- Starting ability in normal temperature.
- 50% rated power load moment capability.
- Voltage deviation and speed variation: 0%, 25%, 50%, 75%, 100%, 110% Load.

Painting Process

- Painting process specifications and colors are based on the manufacturer's standard.
- The customer could also choose the color which the manufacturer offers.

2 General Features

- Cummins engine 6CTA8.3-G1
- Close coupled to Stamford alternator UCI274G
- Microprocessor control module PLC-920
- Main circuit breaker: 320A
- Rotate speed governor: Electrical governor
- Excitation system: Self excited,SHUNT
- A.V.R model: AS440
- Key switch
- Emergency stop switch
- ATS(automatic transfer switch)receptacle
- Remote run connector
- 2x12V/72AH sealed for life maintenance free battery
- Lockable battery isolator switch
- Powder coated canopy
- 45℃ radiator
- Steel base frame
- Vibration isolators between the engine/alternator and base frame
- Dry type air filter
- Base fuel tank for 8 hours running
- Drain points for fuel tank
- Operation Manual / Specifications

3 Equipment

General technical data

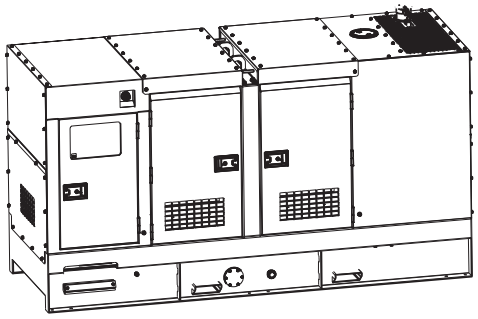

Model..... QSV180CS

Fuel tank..... 350L

Dry weight..... 2510kg

Sound pressure level @ 7m 64.0dBA

Dimensions L×W×H..... 3155x1100x1700mm

Standby Power 200kVA/160kW

Prime Power 180kVA/145kW

Voltage	380V		400V		415V
Ampere	273.5A		259.8A		250.4A
Genset Fuel Consumption					
Frequency/Load	25%	50%	75%	100%	110%
50Hz (L/h)	13	21	31	42	48

Power System

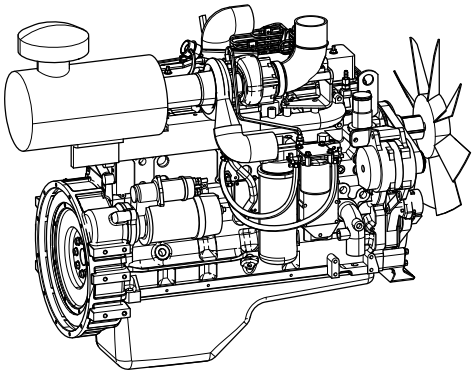

Engine Manufacturer/Brand.....Cummins
Engine Model..... 6CTA8.3-G1
Dimensions L×W×H..... 1128x740x1084mm
Dry Weigh (approx.) 629kg
Number of Cylinders.....6
Bore 114mm
Stroke 135mm
Displacement.....8.3L
Compression Ratio 17.3
Type of injection..... Direct injection
Intake System.....Turbocharged,Aftercooled
Intake Resistance .....≦6.0kPa
Cooling System .....Water cooled
Fan ..... Pusher
Battery Voltage 12/24V
Type of Fuel.....0# or –10# light diesel
Type of Oil 15W40-CF4
Oil Capacity 27.6L
Type of Coolant .....Glycol mixture
Coolant Capacity (Engine only).....12.3L
Back Pressure .....≦10.0kPa
Standby Power 180kW
Prime Power 163kW

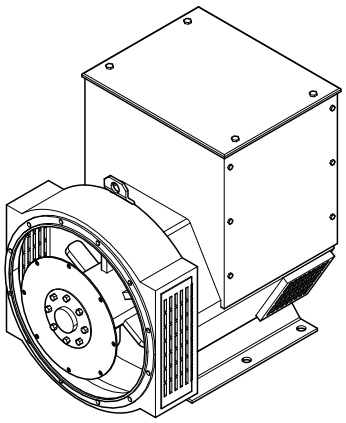

Alternator Manufacturer/Brand ..... Stamford
Alternator Model UCI274G
Exciter.....Brushless
Cooling Fan ..... Cast alloy aluminum
Windings.....100% copper
Insulation Class ..... H
Winding Pitch.....2/3
Terminals 12
Drip Proof IP23
Altitude.....≤1000m
Overspeed 2250rpm
Air Flow.....N/A
Voltage Regulation .....±1.0%
Total Harmonic TGH / THCat no load < 1.5 % - on load < 5%
Telephone Interference..... THF<2%;TIF<50

PLC-920 Control System

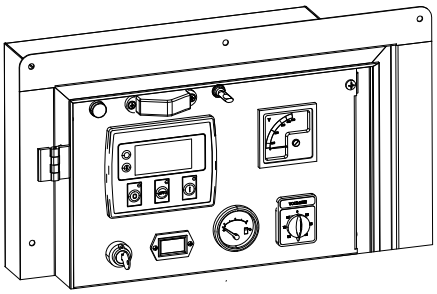

PLC-920 is an advanced control module based on microprocessor designed to control the engine via push buttons on the front panel. The module is used to start and stop the engine and indicate fault conditions, automatically shutting down the engine and giving a true first up fault condition of an engine failure.

Standard Control Function

- Manual Engine Control Module
- Low Oil Pressure
- High Engine Temperature
- Auxiliary Shutdown
- Overspeed Protection
- Protection hold-off timer
- Charge Failure warning

4 Overall Dimensions

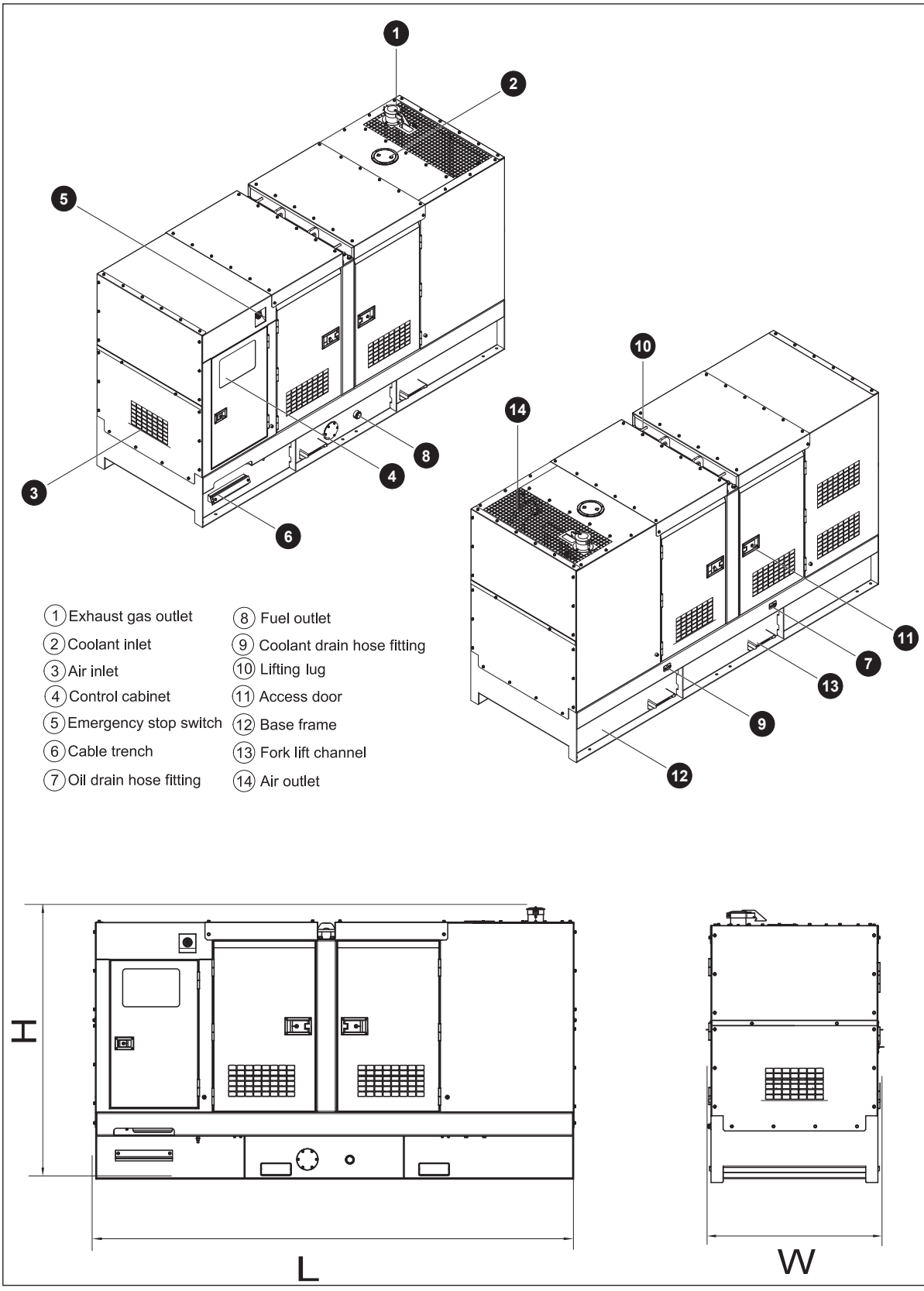

1 Exhaust gas outlet
2 Coolant inlet
3 Air inlet
4 Control cabinet
5 Emergency stop switch
6 Cable trench
7 Oil drain hose fitting
8 Fuel outlet
9 Coolant drain hose fitting
10 Lifting lug
11 Access door
12 Base frame
13 Fork lift channel
14 Air outlet

5 Control System

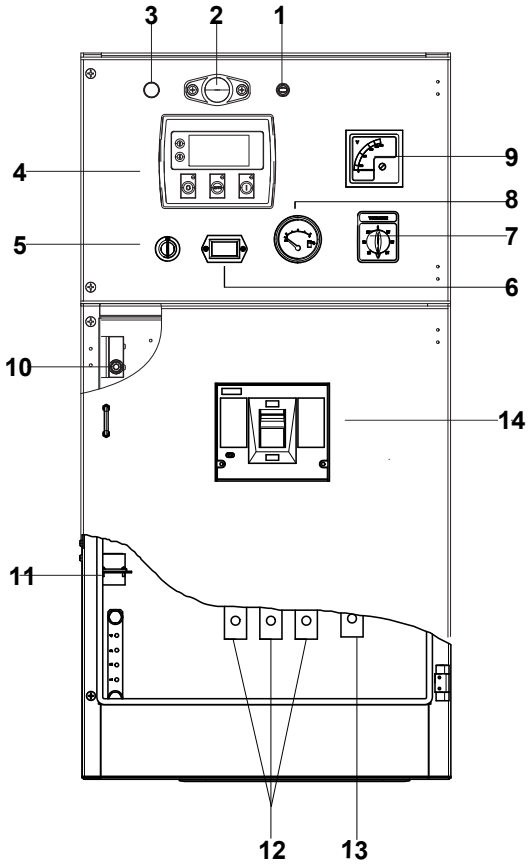

Control & field wiring cabinet

Ref.	Description
1	Control cabinet lamp switch
2	Control cabinet lamp
3	Charge indicator
4	Control module
5	Key switch
6	Time counter
7	Voltage changer-over switch
8	Fuel level meter
9	Voltage meter
10	Limit switch
11	Mains input/Remote control/ATS connector
12	Live wire terminal
13	Neutral wire terminal
14	Main circuit breaker

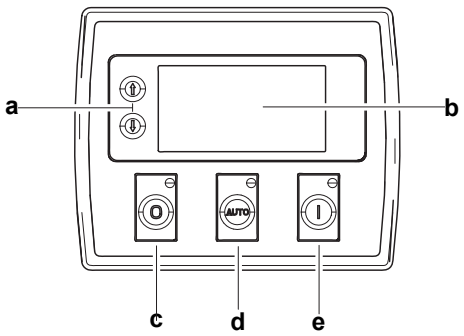

Control module

Ref.	Description
a	Navigation button£» Accept (Configuration mode only)
b	Main status display
c	Stop/reset button£» Next page (Configuration mode only)
d	Auto start button£» Decrease value/next item (Configuration mode only)
e	Start button£» Increase value/next item (Configuration mode only)

1000035762-A2-E
05.2023

Specification may change without prior notice. For more info., contact Power Link or your local distributors please.

©2023 POWERLINK