SPECIFICATION

POWERINK
Power Systems
Power Link the World

MODEL VR900X6S

VR SERIES

(FOR 60Hz DIESEL GENSET)

Revision: A2 (12/22)

To inquire the latest revision of document, visit our website at: www.powerlinkworld.com

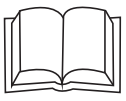

VR series
VR900X6S
60 Hz @ 1800rpm,3-phase/4-wiring

1 Standards & Conditions

Design Standards

The designs and the productions are in conformity with:

- Conformite Europeenne (CE)
- ISO8528-5:2005
- GB/T2820.5-2009

Environmental Operating Conditions

- Installation place: Outdoors or indoors (well ventilated).
- Ambient temperature: -25℃ to 45℃.The coolant heater is needed when the temperature is below 5℃
- Humidity: Less than 90%.
- Altitude: Below one thousand (1000) meters above sea level.

Factory Inspection

- Inspection items.
- Protection devices working test.
- Starting ability in normal temperature.
- 50% rated power load moment capability.
- Voltage deviation and speed variation: 0%, 25%, 50%, 75%, 100%, 110% Load.

Painting Process

- Painting process specifications and colors are based on the manufacturer's standard.
- The customer could also choose the color which the manufacturer offers.

2 General Features

- PowerLink engine VR6-35TAG5
- Close coupled to PowerLink alternator PL6C
- Microprocessor control module XC762
- Main circuit breaker: 1600A
- Rotate speed governor: ECU
- Excitation System: Self Excited,SHUNT
- A.V.R.Model: SX440
- Key switch
- Emergency stop switch
- ATS (automatic transfer switch) receptacle
- Remote run connector
- 2x12V/150AH sealed for life maintenance free battery
- Lockable battery isolator switch
- Powder coated canopy
- 50℃ radiator
- Oil pump on the engine
- Steel base frame with forkslots
- Vibration isolators between the engine/alternator and base frame
- Dry type air filter
- Base fuel tank with 7 hours running
- Drain points for fuel tank
- Operator's Manual / Specifications

3 Equipment Specification

General technical data

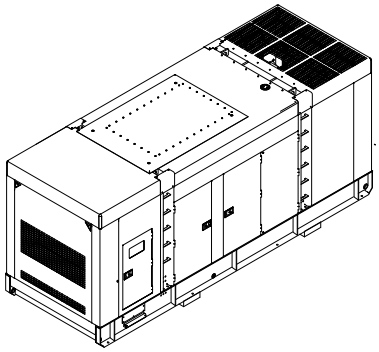

Model.....VR900X6S

Tank capacity.....1600L

Dry weight.....8000kg

Sound pressure level @ 7m 77.0dBA

Dimensions L×W×H.....4695x1725x2558mm

Standby Power 1210kVA/968kW

Prime Power 1100kVA/880kW

Voltage	208V	220V	230V	240V
Ampere	2498.2A	2362.0A	2259.3A	2165.1A

Genset Fuel Consumption					
Frequency/Load	25%	50%	75%	100%	110%
60Hz (L/h)	59.5	118	167.2	225.1	256

Power System

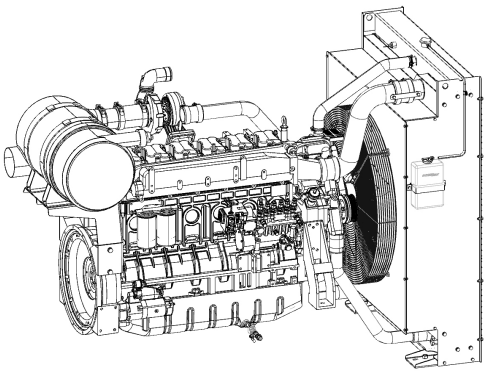

Engine Manufacturer/Brand.....PowerLink
Engine Model.....VR6-35TAG5
Dimensions L×W×H..... 2429x1387x2146mm
Dry Weigh (approx.) 4000kg
Number of Cylinders.....6
Bore 186mm
Stroke 215mm
Displacement.....35.1L
Compression Ratio 15.0
Type of injection..... Direct injection
Intake System.....Turbocharged with intercooler
Intake Resistance .....≦5kPa
Cooling System .....Water cooled
Fan ..... Pusher
Battery Voltage 24V
Type of Fuel..... No.2 or ASTM D975
Type of Oil ..... API CF/SE or CCMCF4
Oil Capacity 100.0L
Type of Coolant ..... Glycol mixture
Coolant Capacity 80.0L
Back Pressure .....≦6kPa
Standby Power 1012kW
Prime Power 920kW

Alternator

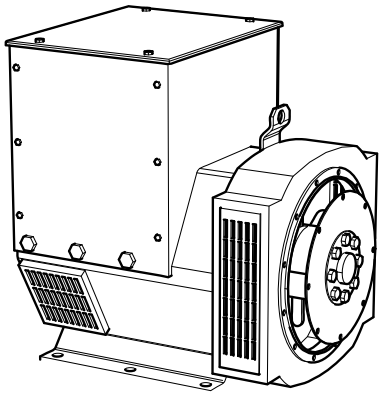

Alternator Manufacturer/Brand ..... PowerLink
Alternator Model PL6C
Exciter.....Brushless
Cooling Fan ..... Cast alloy aluminum
Windings.....100% copper
Insulation Class ..... H
Winding Pitch.....2/3
Terminals 12
Drip Proof IP23
Altitude.....≤1000m
Overspeed 2250rpm
Air Flow.....N/A
Voltage Regulation .....±1.0%
Total Harmonic TGH / THCat no load < 1.5 % - on load < 5%
Telephone Interference..... THF<2%;TIF<50

XC762 Control System

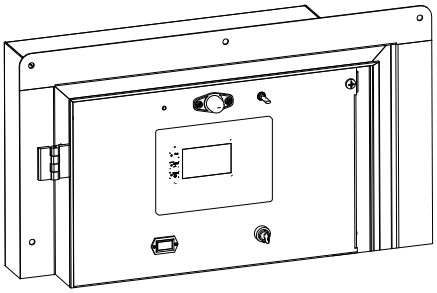

XC762 is an advanced control module based on micro-processor, containing all necessary functions for protection of the genset and the breaker control. It can monitor the mains supply, and automatically start the engine when the mains is abnormal. Accurately measure various operational parameters and display all values and alarms information on the LCD. In addition, the control module can automatically shut down the engine and indicate the engine failure.

- Microprocessor control, with high stability and credibility
- Monitoring and measuring operational parameters of the mains supply and genset
- Indicating operation status, fault conditions, all parameters and alarms
- Multiple protections; multiple parameters display, like pressure, temp. etc.
- Manual, automatic and remote work mode selectable
- Real time clock for time and date display, overall runtime display, 250 log entries
- Overall power output display
- Integral speed/frequency detecting, telling status of start, rated operation, overspeed etc.
- Communication with PC via RS485 OR RS232 interface, using MODBUS protocol

4 Overall Dimensions

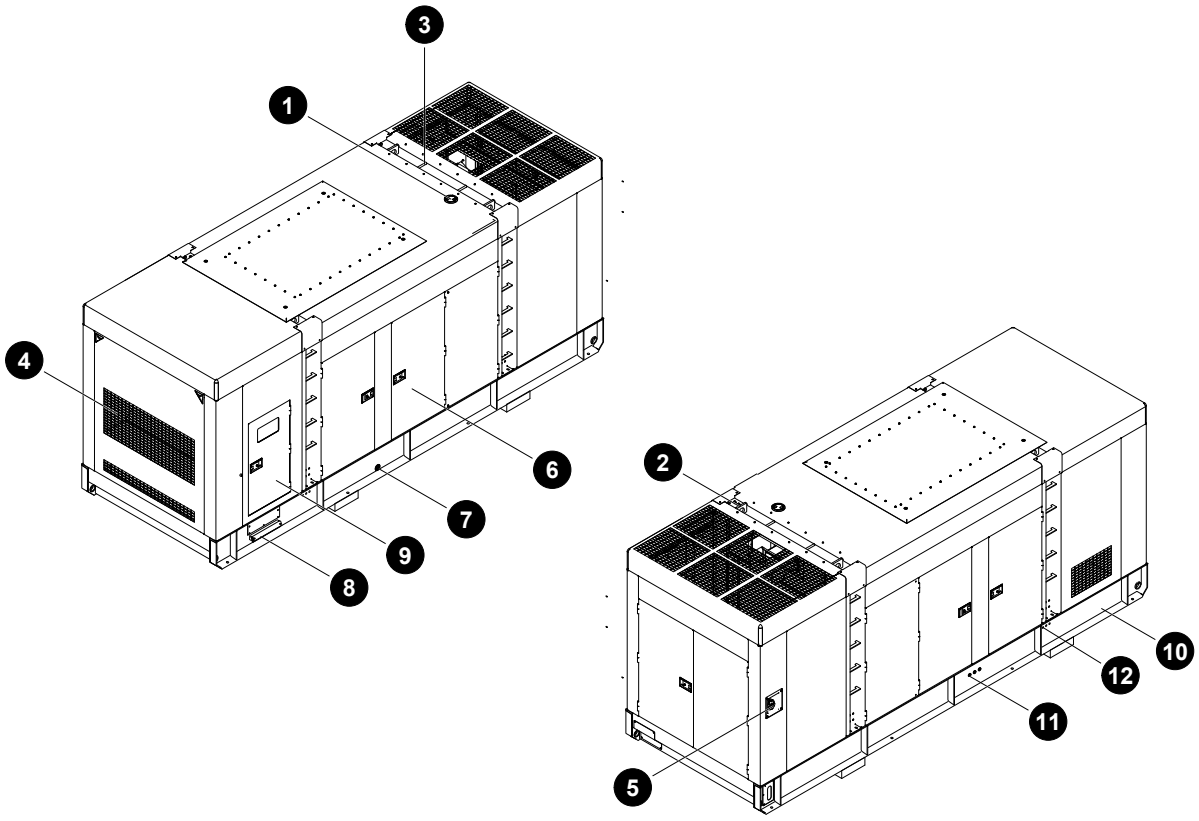

⑥ Access door
⑤ Emergency stop switch
④ Air inlet
③ Roping lug
② Lifting lug
① Coolant inlet
⑫ Coolant/Oil drain hose fitting
⑪ External fuel inlet/return hose fitting
⑩ Base frame
⑨ Control cabinet
⑧ Cable trench
⑦ Fuel drain

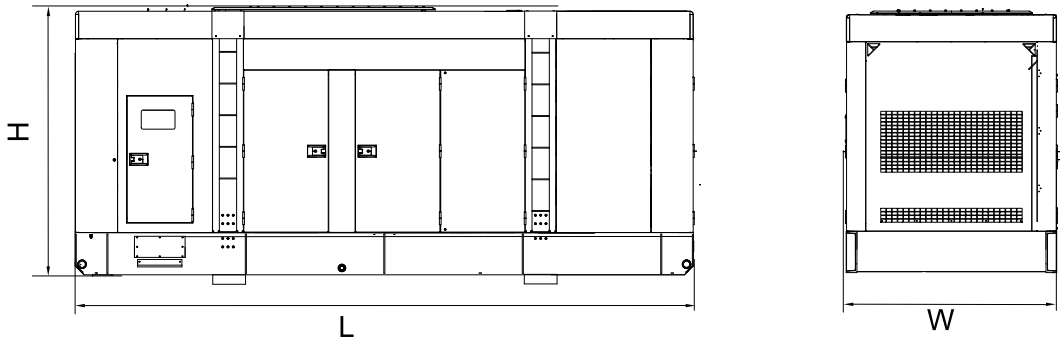

5 Control System

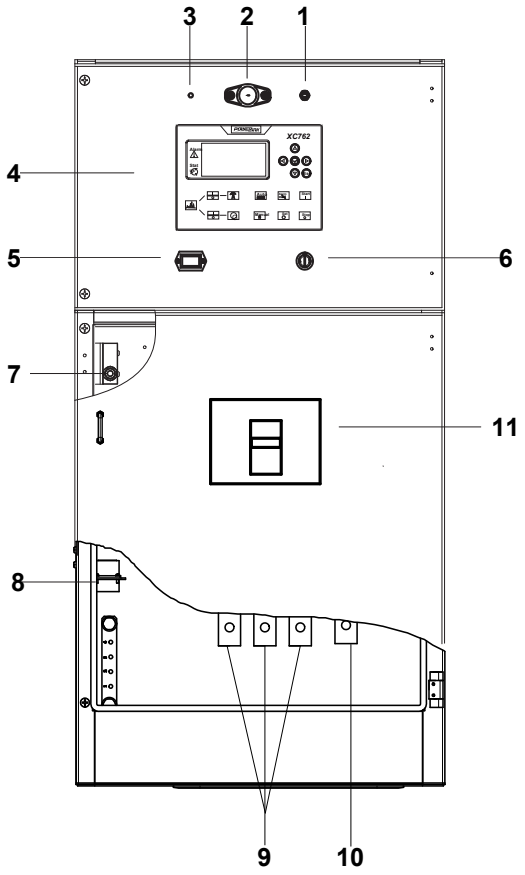

Control & field wiring cabinet

Ref.	Description
1	Control cabinet lamp switch
2	Control cabinet lamp
3	Charge indicator
4	Control module
5	Time counter
6	Key switch
7	Limit switch
8	Mains input/Remote control/ATS connector
9	Live wire terminal
10	Neutral wire terminal
11	Main circuit breaker

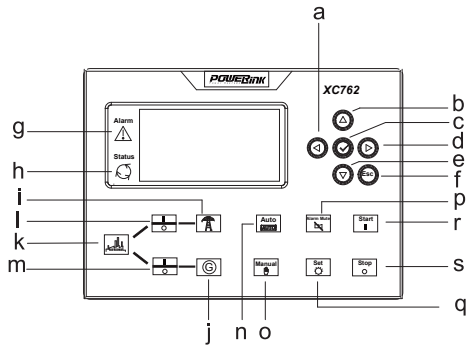

Control module

a	Button (next page)
b	Button (increase value / previous item)
c	Button (accept)
d	Button (previous page)
e	Button (decrease value / next item)
f	Button (ESC)
g	Indicator (alarm)
h	Indicator (running)
i	Indicator (mains available)
j	Indicator (genset available)
k	Indicator (mains / genset ON)
l	Button (breaker ON / OFF)
m	Button (breaker ON / OFF)
n	Button (Auto mode)
o	Button (Manual mode)
p	Button (reset alarm)
q	Button (set parameters)
r	Button (start)
s	Button (stop)

SPECIFICATION

VR SERIES DIESEL GENSET

VR900X6S

Revision: A2 (12/22)

To inquire the latest revision of document, visit our website at: www.powerlinkworld.com

