# SPECIFICATION

POWERINK
Power Systems
Power Link the World

# MODEL VR500X6S

## VR SERIES

## (FOR 60Hz DIESEL GENSET)

Revision: A2 (04/23)

**To inquire the latest revision of document, visit our website at: www.powerlinkworld.com**

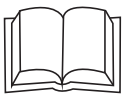

# *VR series*
# *VR500X6S*
***60 Hz @ 1800rpm,3-phase/4-wiring***

## 1 Standards & Conditions

### Design Standards

The designs and the productions are in conformity with:

- Conformite Europeenne (CE)
- ISO8528-5:2005
- GB/T2820.5-2009

### Environmental Operating Conditions

- Installation place: Outdoors or indoors (well ventilated).
- Ambient temperature: -25℃ to 45℃.The coolant heater is needed when the temperature is below 5℃
- Humidity: Less than 90%.
- Altitude: Below one thousand (1000) meters above sea level.

### Factory Inspection

- Inspection items.
- Protection devices working test.
- Starting ability in normal temperature.
- 50% rated power load moment capability.
- Voltage deviation and speed variation: 0%, 25%, 50%, 75%, 100%, 110% Load.

### Painting Process

- Painting process specifications and colors are based on the manufacturer's standard.
- The customer could also choose the color which the manufacturer offers.

## 2 General Features

- PowerLink engine VR6-16TAG3
- Close coupled to PowerLink alternator PL5M
- Microprocessor control module PLC-920
- Main circuit breaker: 800A
- Rotate speed governor: ECU
- Excitation System: SELF EXCITED
- A.V.R.Model: SX440
- Key switch
- Emergency stop switch
- ATS (automatic transfer switch) receptacle
- Remote run connector
- 2x12V/150AH sealed for life maintenance free battery
- Lockable battery isolator switch
- Powder coated canopy
- 50℃ radiator
- Oil pump on the engine
- Steel base frame with forkslots
- Vibration isolators between the engine/alternator and base frame
- Dry type air filter
- Base fuel tank with 7 hours running
- Drain points for fuel tank
- Operator's Manual / Specifications

## 3 Equipment Specification

### General technical data

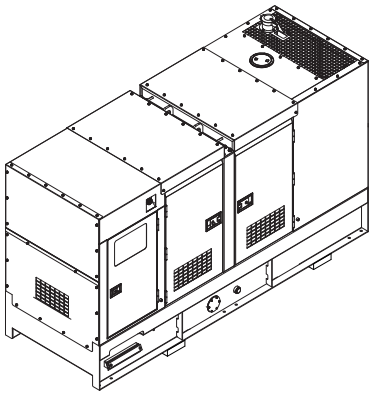

Model.....VR500X6S

Tank capacity.....900L

Dry weight.....4900kg

Sound pressure level @ 7m .....74.0dBA

Dimensions L×W×H.....4595x1525x2555mm

Standby Power .....619kVA/495kW

Prime Power .....563kVA/450kW

| Voltage | 416V | 440V | 460V | 480V |
|---|---|---|---|---|
| Ampere | 781.4A | 738.8A | 706.6A | 677.2A |

| ***Genset Fuel Consumption*** | | | | | |
|---|---|---|---|---|---|
| Frequency/Load | 25% | 50% | 75% | 100% | 110% |
| 60Hz (L/h) | 34 | 65 | 97 | 128 | 141 |

## Power System

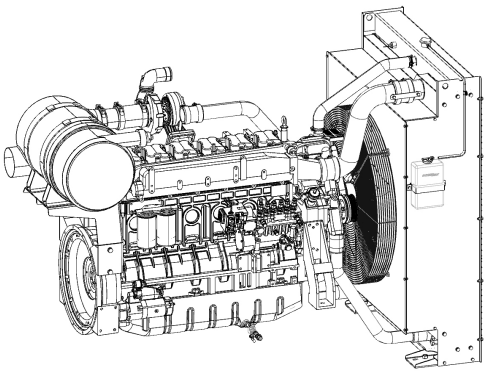

Engine Manufacturer/Brand..... Powerlink
Engine Model.....VR6-16TAG3
Dimensions L×W×H..... 2448x1240x1688mm
Dry Weigh (approx.) ..... 1980kg
Number of Cylinders.....6
Bore .....145mm
Stroke .....165mm
Displacement.....16.4L
Compression Ratio .....15.0
Type of injection..... Direct injection
Intake System..... Turbocharged with intercooler
Intake Resistance .....≦5kPa
Cooling System .....Water cooled
Fan ..... Pusher
Battery Voltage ..... 24V
Type of Fuel..... No.2 or ASTM D975
Type of Oil ..... API CF/SE or CCMCF4
Oil Capacity .....56.0L
Type of Coolant ..... Glycol mixture
Coolant Capacity .....89.0L
Back Pressure .....≦6kPa
Standby Power .....572kW
Prime Power .....520kW

## Alternator

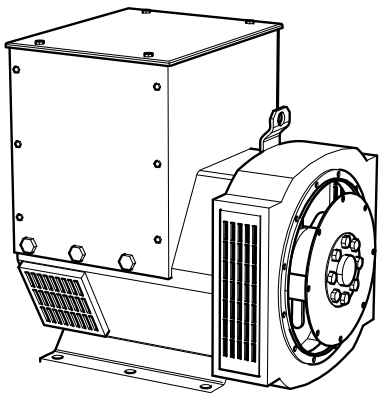

Alternator Manufacturer/Brand ..... PowerLink
Alternator Model .....PL5M
Exciter.....Brushless
Cooling Fan ..... Cast alloy aluminum
Windings.....100% copper
Insulation Class ..... H
Winding Pitch.....2/3
Terminals .....12
Drip Proof ..... IP23
Altitude.....≤1000m
Overspeed .....2250rpm
Air Flow.....N/A
Voltage Regulation .....±1.0%
Total Harmonic TGH / THCat no load < 1.5 % - on load < 5%
Telephone Interference..... THF<2%;TIF<50

## PLC-920 Control System

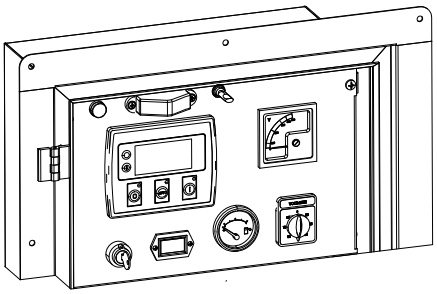

PLC-920 is an advanced control module based on microprocessor designed to control the engine via push buttons on the front panel. The module is used to start and stop the engine and indicate fault conditions, automatically shutting down the engine and giving a true first up fault condition of an engine failure.

**Standard Control Function**

- Manual Engine Control Module
- Low Oil Pressure
- High Engine Temperature
- Auxiliary Shutdown
- Overspeed Protection
- Protection hold-off timer
- Charge Failure warning

## 4 Overall Dimensions

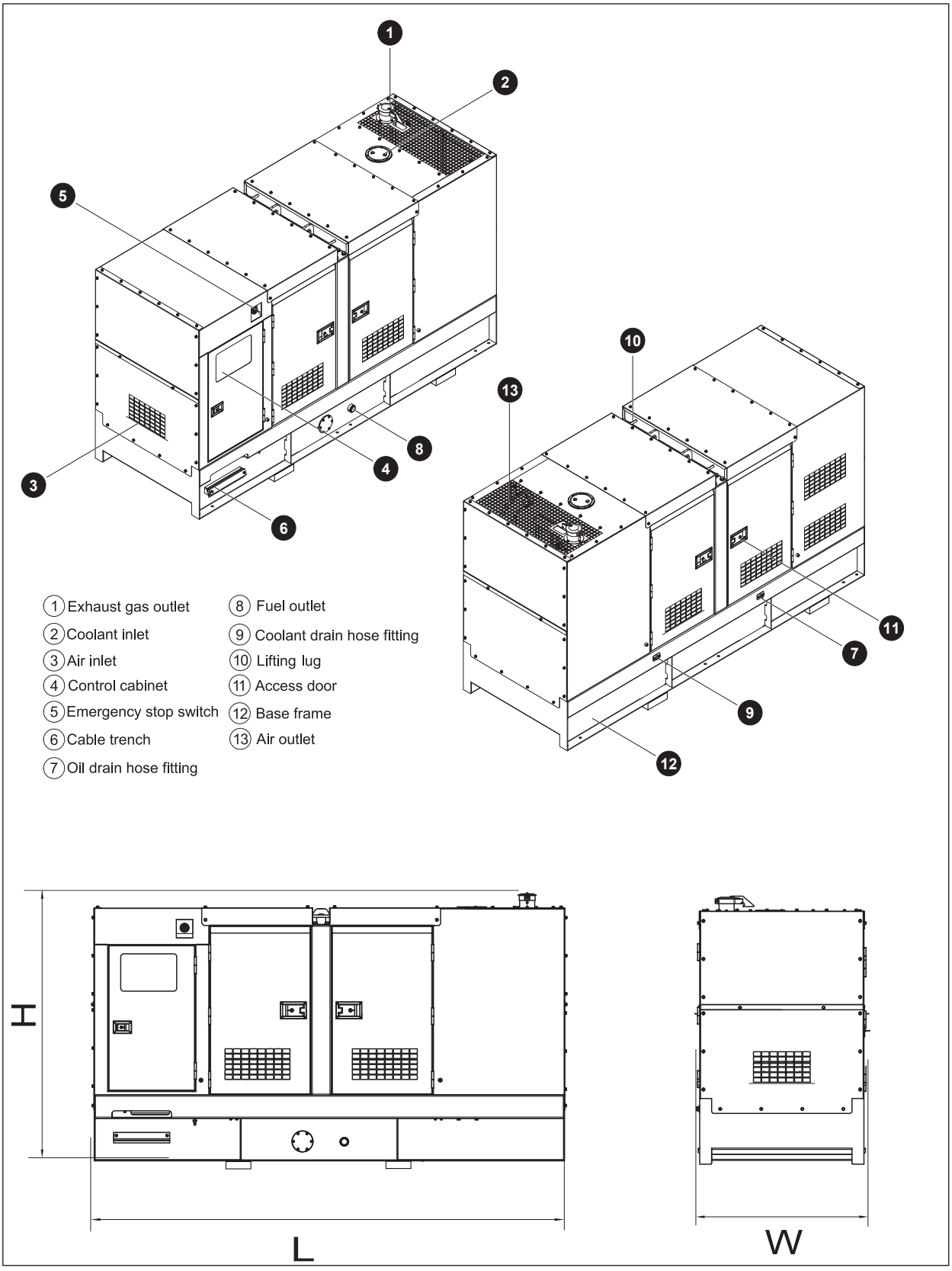


1. Exhaust gas outlet
2. Coolant inlet
3. Air inlet
4. Control cabinet
5. Emergency stop switch
6. Cable trench
7. Oil drain hose fitting
8. Fuel outlet
9. Coolant drain hose fitting
10. Lifting lug
11. Access door
12. Base frame
13. Air outlet

## 5 Control System

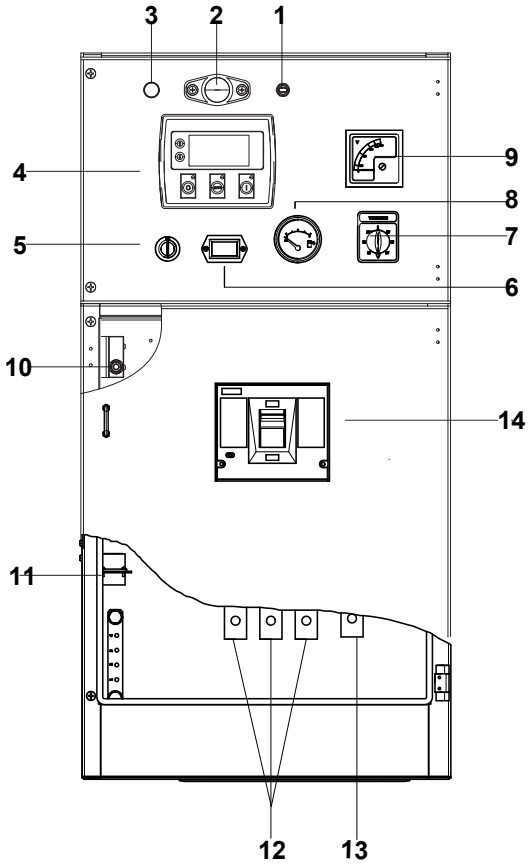


**Control & field wiring cabinet**

| Ref. | Description |
|---|---|
| 1 | Control cabinet lamp switch |
| 2 | Control cabinet lamp |
| 3 | Charge indicator |
| 4 | Control module |
| 5 | Key switch |
| 6 | Time counter |
| 7 | Voltage changer-over switch |
| 8 | Fuel level meter |
| 9 | Voltage meter |
| 10 | Limit switch |
| 11 | Mains input/Remote control/ATS connector |
| 12 | Live wire terminal |
| 13 | Neutral wire terminal |
| 14 | Main circuit breaker |

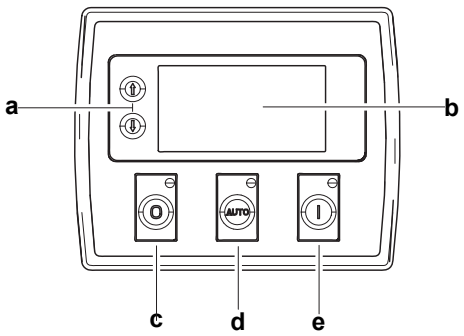


**Control module**

| Ref. | Description |
|---|---|
| a | Navigation button£»<br>Accept (Configuration mode only) |
| b | Main status display |
| c | Stop/reset button£»<br>Next page (Configuration mode only) |
| d | Auto start button£»<br>Decrease value/next item (Configuration mode only) |
| e | Start button£»<br>Increase value/next item (Configuration mode only) |

# SPECIFICATION

## VR SERIES DIESEL GENSET

# VR500X6S

Revision: A2 (04/23)

**To inquire the latest revision of document, visit our website at: www.powerlinkworld.com**

