SPECIFICATION

POWERINK
Power Systems
Power Link the World

MODEL VR360X6S

VR SERIES

(FOR 60Hz DIESEL GENSET)

Revision: A2 (12/22)

To inquire the latest revision of document, visit our website at: www.powerlinkworld.com

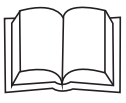

VR series
VR360X6S
60 Hz @ 1800rpm,3-phase/4-wiring

1 Standards & Conditions

Design Standards

The designs and the productions are in conformity with:

- Conformite Europeenne (CE)
- ISO8528-5:2005
- GB/T2820.5-2009

Environmental Operating Conditions

- Installation place: Outdoors or indoors (well ventilated).
- Ambient temperature: -25℃ to 45℃. The coolant heater is needed when the temperature is below 5℃
- Humidity: Less than 90%.
- Altitude: Below one thousand (1000) meters above sea level.

Factory Inspection

- Inspection items.
- Protection devices working test.
- Starting ability in normal temperature.
- 50% rated power load moment capability.
- Voltage deviation and speed variation: 0%, 25%, 50%, 75%, 100%, 110% Load.

Painting Process

- Painting process specifications and colors are based on the manufacturer's standard.
- The customer could also choose the color which the manufacturer offers.

2 General Features

- PowerLink engine VR6-12TAG2
- Close coupled to PowerLink alternator PL4LS
- Microprocessor control module PLC-920
- Main circuit breaker: 500A
- Rotate speed governor: EFC
- Excitation System: Self Excited,SHUNT
- A.V.R.Model: SX440
- Key switch
- Emergency stop switch
- ATS (automatic transfer switch) receptacle
- Remote run connector
- 2x12V/120AH sealed for life maintenance free battery
- Lockable battery isolator switch
- Powder coated canopy
- 50℃ radiator
- Oil pump on the engine
- Steel base frame with forkslots
- Vibration isolators between the engine/alternator and base frame
- Dry type air filter
- Base fuel tank with 7 hours running
- Drain points for fuel tank
- Operator's Manual / Specifications

3 Equipment Specification

General technical data

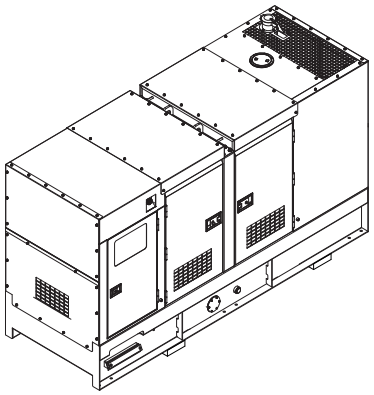

Model..... VR360X6S
Tank capacity.....680L
Dry weight.....4700kg
Noise level @7m 73.0dBA
Dimensions L×W×H.....4240x1420x2500mm
Standby Power 454kVA/363kW
Prime Power 413kVA/330kW

Voltage	208V	220V	230V	240V
Ampere	999.3A	944.8A	903.7A	866.1A

Genset Fuel Consumption					
Frequency/Load	25%	50%	75%	100%	110%
60Hz (L/h)	24	44	64	87	95

Power System

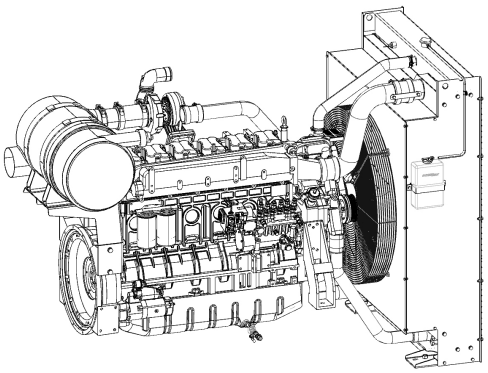

Engine Manufacturer/Brand.....Listerpetter
Engine Model.....VR6-12TAG2
Dimensions L×W×H..... 1904x980x1788mm
Dry Weigh (approx.) 1100kg
Number of Cylinders.....6
Bore 126mm
Stroke 155mm
Displacement.....12.0L
Compression Ratio 17.0
Type of injection..... Direct injection
Intake System..... Turbocharged with intercooler
Intake Resistance .....≦5kPa
Cooling System .....Water cooled
Fan ..... Pusher
Battery Voltage 24V
Type of Fuel..... No.2 or ASTM D975
Type of Oil ..... API CF/SE or CCMCF4
Oil Capacity 34.0L
Type of Coolant ..... Glycol mixture
Coolant Capacity 25.0L
Back Pressure .....≦6kPa
Standby Power 394kW
Prime Power 358kW

Alternator

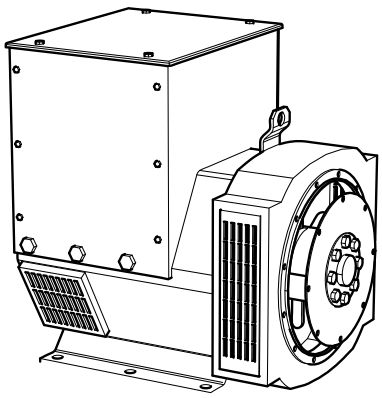

Alternator Manufacturer/Brand ..... PowerLink
Alternator Model PL4LS
Exciter.....Brushless
Cooling Fan ..... Cast alloy aluminum
Windings.....100% copper
Insulation Class ..... H
Winding Pitch.....2/3
Terminals 12
Drip Proof IP23
Altitude.....≤1000m
Overspeed 2250rpm
Air Flow.....N/A
Voltage Regulation .....±1.0%
Total Harmonic TGH / THCat no load < 1.5 % - on load < 5%
Telephone Interference..... THF<2%;TIF<50

PLC-920 Control System

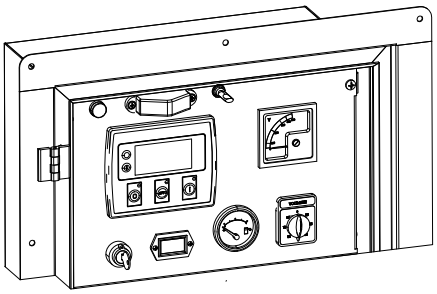

PLC-920 is an advanced control module based on microprocessor designed to control the engine via push buttons on the front panel. The module is used to start and stop the engine and indicate fault conditions, automatically shutting down the engine and giving a true first up fault condition of an engine failure.

Standard Control Function

- Manual Engine Control Module
- Low Oil Pressure
- High Engine Temperature
- Auxiliary Shutdown
- Overspeed Protection
- Protection hold-off timer
- Charge Failure warning

4 Overall Dimensions

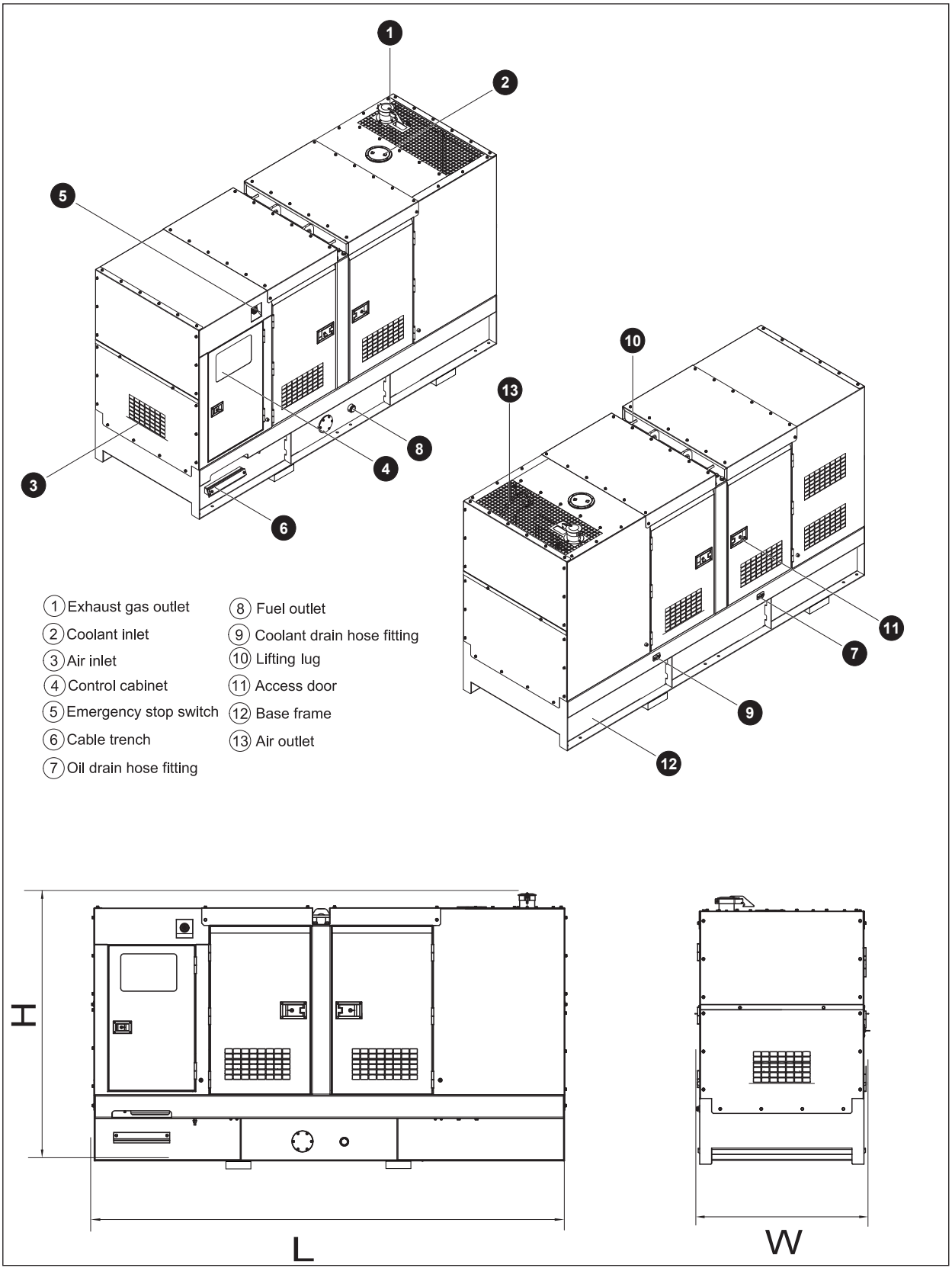

1. Exhaust gas outlet
2. Coolant inlet
3. Air inlet
4. Control cabinet
5. Emergency stop switch
6. Cable trench
7. Oil drain hose fitting
8. Fuel outlet
9. Coolant drain hose fitting
10. Lifting lug
11. Access door
12. Base frame
13. Air outlet

5 Control System

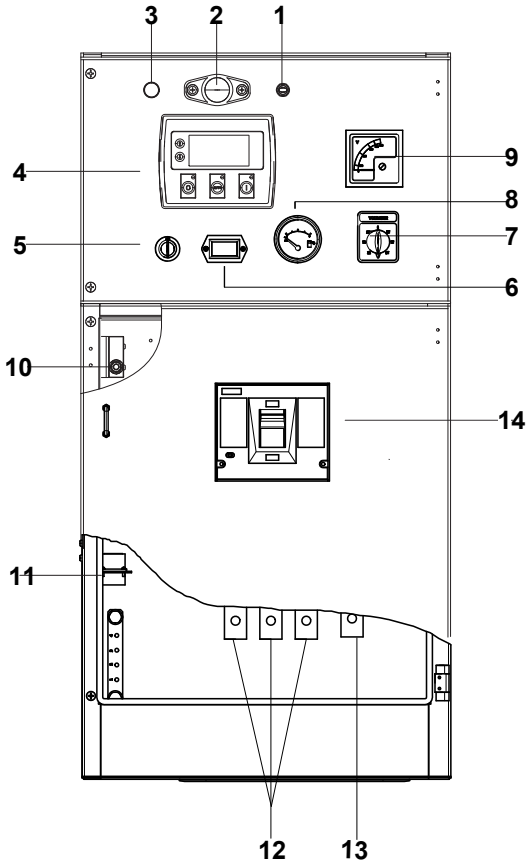

Control & field wiring cabinet

Ref.	Description
1	Control cabinet lamp switch
2	Control cabinet lamp
3	Charge indicator
4	Control module
5	Key switch
6	Time counter
7	Voltage changer-over switch
8	Fuel level meter
9	Voltage meter
10	Limit switch
11	Mains input/Remote control/ATS connector
12	Live wire terminal
13	Neutral wire terminal
14	Main circuit breaker

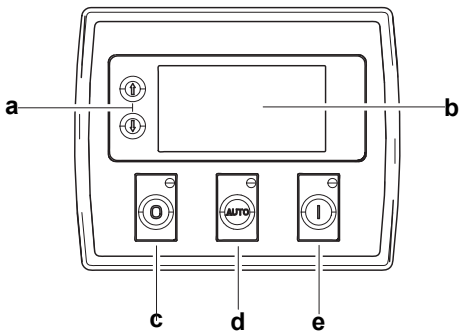

Control module

Ref.	Description
a	Navigation button£» Accept (Configuration mode only)
b	Main status display
c	Stop/reset button£» Next page (Configuration mode only)
d	Auto start button£» Decrease value/next item (Configuration mode only)
e	Start button£» Increase value/next item (Configuration mode only)

SPECIFICATION

VR SERIES DIESEL GENSET

VR360X6S

Revision: A2 (12/22)

To inquire the latest revision of document, visit our website at: www.powerlinkworld.com

