SPECIFICATION

POWERINK
Power Systems
Power Link the World

MODEL VR90X6S

VR SERIES

(FOR 60Hz DIESEL GENSET)

Revision: A2 (12/22)

To inquire the latest revision of document, visit our website at: www.powerlinkworld.com

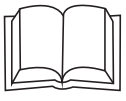

VR series
VR90X6S
60 Hz @ 1800rpm,3-phase/5-wiring

1 Standards & Conditions

Design Standards

The designs and the productions are in conformity with:

- Conformite Europeenne (CE)
- ISO8528-5:2005
- GB/T2820.5-2009

Environmental Operating Conditions

- Installation place: Outdoors or indoors (well ventilated).
- Ambient temperature: -25℃ to 45℃.The coolant heater is needed when the temperature is below 5℃
- Humidity: Less than 90%.
- Altitude: Below one thousand (1000) meters above sea level.

Factory Inspection

- Inspection items.
- Protection devices working test.
- Starting ability in normal temperature.
- 50% rated power load moment capability.
- Voltage deviation and speed variation: 0%, 25%, 50%, 75%, 100%, 110% Load.

Painting Process

- Painting process specifications and colors are based on the manufacturer's standard.
- The customer could also choose the color which the manufacturer offers.

2 General Features

- PowerLink engine VR4-4.1TAG3
- Close coupled to PowerLink alternator PL2D
- Microprocessor control module PLC-920
- Main circuit breaker: 320A
- Rotate speed governor: EFC
- Excitation System: Self Excited,SHUNT
- A.V.R.Model: SX440
- Key switch
- Emergency stop switch
- ATS (automatic transfer switch) receptacle
- Remote run connector
- 2x12V/72AH sealed for life maintenance free battery
- Lockable battery isolator switch
- Powder coated canopy
- 50℃ radiator
- Oil pump on the engine
- Steel base frame with forkslots
- Vibration isolators between the engine/alternator and base frame
- Dry type air filter
- Base fuel tank with 8 hours running
- Drain points for fuel tank
- Operator's Manual / Specifications

3 Equipment

General technical data

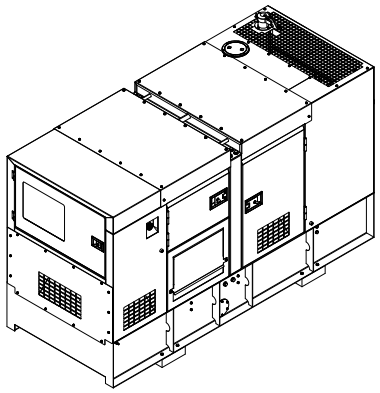

Model..... VR90X6S

Tank capacity.....200L

Dry weight.....2070kg

Sound pressure level @ 7m 68.5dBA

Dimensions L×W×H..... 3142x1215x1719mm

Standby Power 110kVA/88kW

Prime Power 100kVA/80kW

Voltage	208V	220V	230V	240V
Ampere	249.8A	236.2A	226.0A	216.5A

Genset Fuel Consumption					
Frequency/Load	25%	50%	75%	100%	110%
60Hz (L/h)	6	12	18	24	26

Power System

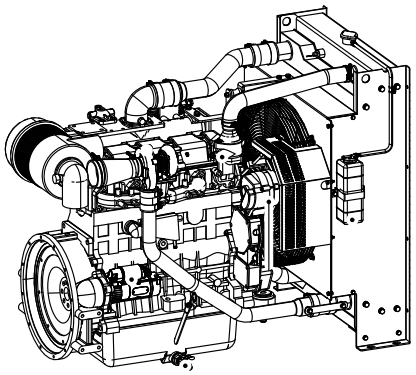

Engine Manufacturer/Brand.....PowerLink
Engine Model.....VR4-4.1TAG3
Dimensions L×W×H.....1160×710×965mm
Dry Weigh (approx.) 500kg
Number of Cylinders.....4
Bore 105mm
Stroke 118mm
Displacement.....4.1L
Compression Ratio 17.0
Type of injection..... Direct injection
Intake System.....Turbocharged with intercooler
Intake Resistance .....≦5kPa
Cooling System .....Water cooled
Fan ..... Pusher
Battery Voltage 24V
Type of Fuel..... No.2 or ASTM D975
Type of Oil ..... API CF/SE or CCMCF4
Oil Capacity 14.0L
Type of Coolant .....Glycol mixture
Coolant Capacity 18.0L
Back Pressure .....≦6kPa
Standby Power 86.9kW
Prime Power 79kW

Alternator

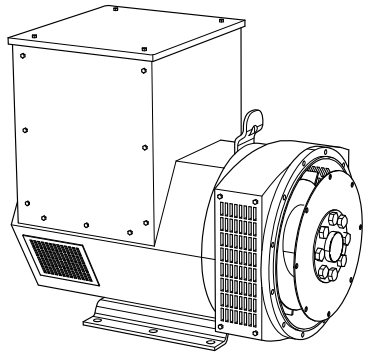

Alternator Manufacturer/Brand ..... PowerLink
Alternator Model PL2D
Exciter.....Brushless
Cooling Fan ..... Cast alloy aluminum
Windings.....100% copper
Insulation Class ..... H
Winding Pitch.....2/3
Terminals 12
Drip Proof IP23
Altitude.....≤1000m
Overspeed 2250rpm
Air Flow.....N/A
Voltage Regulation .....±1.0%
Total Harmonic TGH / THCat no load < 1.5 % - on load < 5%
Telephone Interference..... THF<2%;TIF<50

PLC-920 Control System

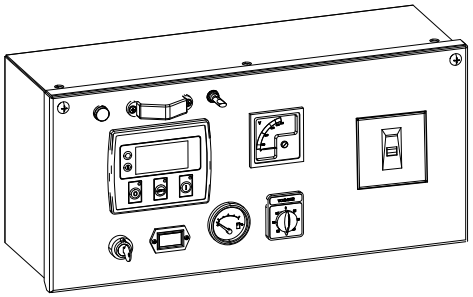

PLC-920 is an advanced control module based on microprocessor designed to control the engine via push buttons on the front panel. The module is used to start and stop the engine and indicate fault conditions, automatically shutting down the engine and giving a true first up fault condition of an engine failure.

Standard Control Function

- Manual Engine Control Module
- Low Oil Pressure
- High Engine Temperature
- Auxiliary Shutdown
- Overspeed Protection
- Protection hold-off timer
- Charge Failure warning

4 Overall Dimensions

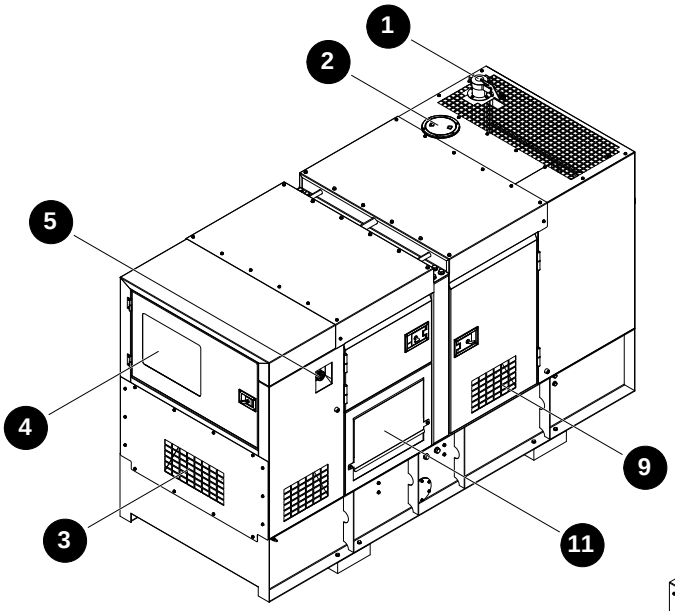

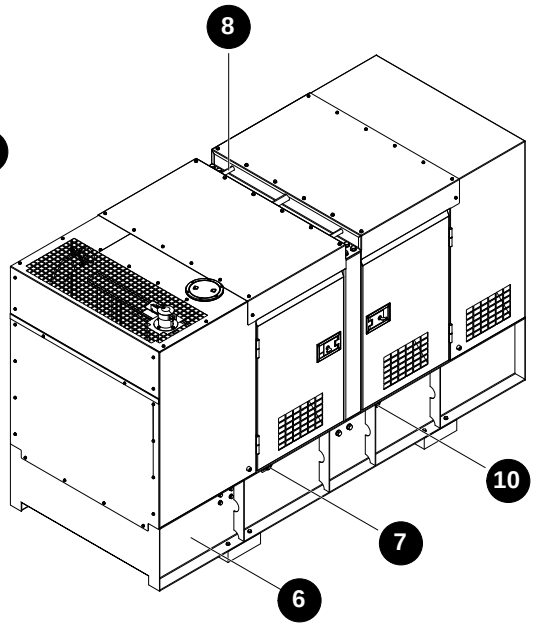

⑦ Coolant drain hose fitting
⑥ Base frame
⑤ Emergency stop switch
④ Control cabinet
③ Air inlet
② Coolant inlet
① Exhaust gas outlet
⑪ Cable trench
⑩ Oil drain hose fitting
⑨ Access door
⑧ Lifting lug

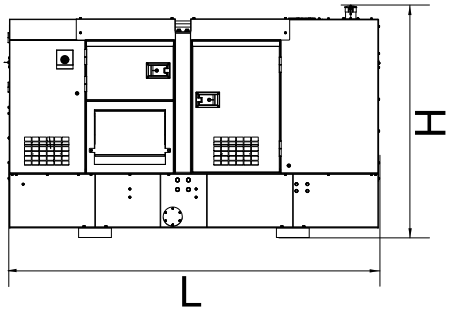

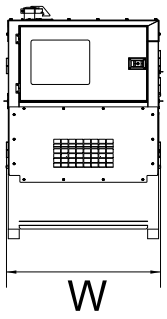

5 Control System

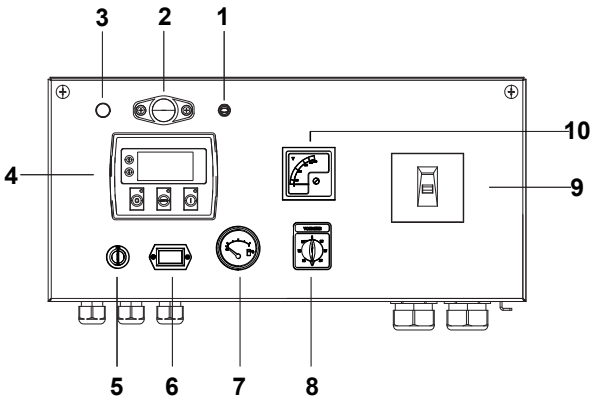

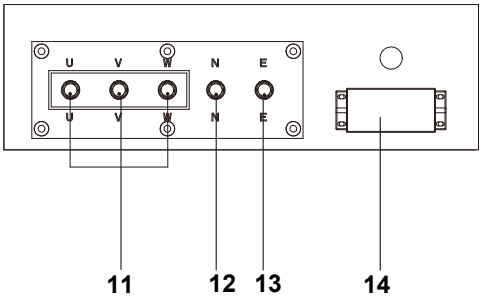

Control & field wiring cabinet

Ref.	Description
1	Control cabinet lamp switch
2	Control cabinet lamp
3	Charge indicator
4	Control module
5	Key switch
6	Time counter
7	Fuel level meter
8	Voltage change-over switch
9	Main circuit breaker
10	Voltage meter
11	Live wire terminals
12	Neutral wire terminal
13	Ground wire terminal
14	Mains input/remote communication connector

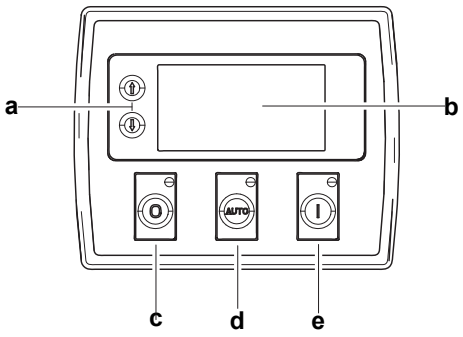

Control module

Ref.	Description
a	Navigation button£» Accept (Configuration mode only)
b	Main status display
c	Stop/reset button£» Next page (Configuration mode only)
d	Auto start button£» Decrease value/next item (Configuration mode only)
e	Start button£» Increase value/next item (Configuration mode only)

SPECIFICATION

VR SERIES DIESEL GENSET

VR90X6S

Revision: A2 (12/22)

To inquire the latest revision of document, visit our website at: www.powerlinkworld.com

