SPECIFICATION

POWERINK
Power Systems
Power Link the World

MODEL VR40X6S

VR SERIES

(FOR 60Hz DIESEL GENSET)

Revision: A2 (12/22)

To inquire the latest revision of document, visit our website at: www.powerlinkworld.com

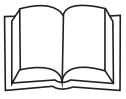

VR series
VR40X6S
60 Hz @ 1800rpm,3-phase/5-wiring

1 Standards & Conditions

Design Standards

The designs and the productions are in conformity with:

- Conformite Europeenne (CE)
- ISO8528-5:2005
- GB/T2820.5-2009

Environmental Operating Conditions

- Installation place: Outdoors or indoors (well ventilated).
- Ambient temperature: -25℃ to 45℃. The coolant heater is needed when the temperature is below 5℃
- Humidity: Less than 90%.
- Altitude: Below one thousand (1000) meters above sea level.

Factory Inspection

- Inspection items.
- Protection devices working test.
- Starting ability in normal temperature.
- 50% rated power load moment capability.
- Voltage deviation and speed variation: 0%, 25%, 50%, 75%, 100%, 110% Load.

Painting Process

- Painting process specifications and colors are based on the manufacturer's standard.
- The customer could also choose the color which the manufacturer offers.

2 General Features

- PowerLink engine VR4-3.2TG2
- Close coupled to PowerLink alternator PL2A
- Microprocessor control module PLC-920
- Main circuit breaker: 163A
- Rotate speed governor: EFC
- Excitation System: Self Excited,SHUNT
- A.V.R.Model: SX440
- Key switch
- Emergency stop switch
- ATS (automatic transfer switch) receptacle
- Remote run connector
- 1x12V/60AH sealed for life maintenance free battery
- Lockable battery isolator switch
- Powder coated canopy
- 50℃ radiator
- Oil pump on the engine
- Steel base frame with forkslots
- Vibration isolators between the engine/alternator and base frame
- Dry type air filter
- Base fuel tank with 5 hours running
- Drain points for fuel tank
- Operator's Manual / Specifications

3 Equipment Specification

General technical data

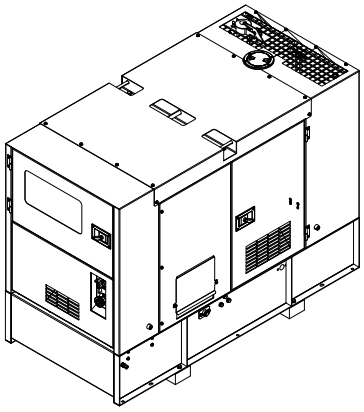

Model..... VR40X6S

Tank capacity..... 80L

Dry weight.....1683kg

Sound pressure level @ 7m 67.4dBA

Dimensions L×W×H..... 2550x1081x1749mm

Standby Power 55kVA/44kW

Prime Power 50kVA/40kW

Voltage	208V	220V	230V	240V
Ampere	83.3A	78.7A	75.3A	72.2A

Genset Fuel Consumption					
Frequency/Load	25%	50%	75%	100%	110%
60Hz (L/h)	3.7	7.2	10.4	14.1	16.0

Power System

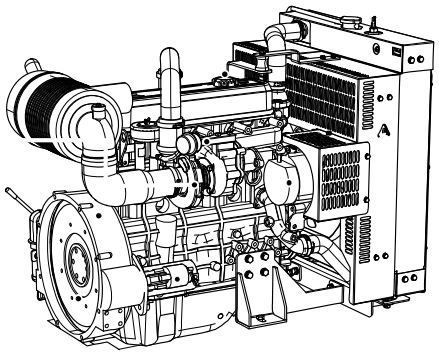

Engine Manufacturer/Brand.....PowerLink
Engine Model.....VR4-3.2TG2
Dimensions L×W×H.....750x620x766mm
Dry Weigh (approx.) 275Kg
Number of Cylinders.....4
Bore 98mm
Stroke 105mm
Displacement.....3.2L
Compression Ratio 18.5
Type of injection..... Direct injection
Intake System.....Turbocharged
Intake Resistance .....≦4kPa
Cooling System .....Water cooled
Fan ..... Pusher
Battery Voltage 12V
Type of Fuel..... No.2 or ASTM D975
Type of Oil .....API CF/SE or CCMCF4
Oil Capacity 8L
Type of Coolant ..... Glycol mixture
Coolant Capacity 14.7L
Back Pressure .....≦10kPa
Standby Power 55kW
Prime Power 50kW

Alternator

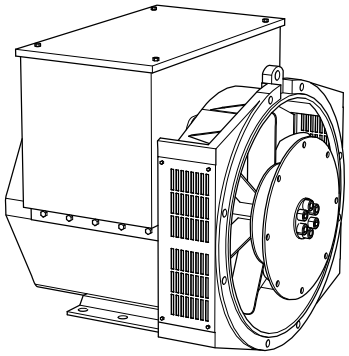

Alternator Manufacturer/Brand ..... PowerLink
Alternator Model PL2A
Exciter.....Brushless
Cooling Fan ..... Cast alloy aluminum
Windings.....100% copper
Insulation Class ..... H
Winding Pitch.....2/3
Terminals 12
Drip Proof IP23
Altitude.....≤1000m
Overspeed 2250rpm
Air Flow.....N/A
Voltage Regulation .....±1.0%
Total Harmonic TGH / THCat no load < 1.5 % - on load < 5%
Telephone Interference..... THF<2%;TIF<50

PLC-920 Control System

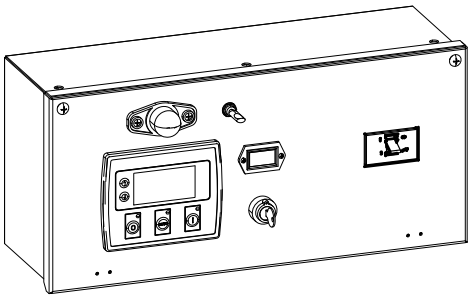

PLC-920 is an advanced control module based on microprocessor designed to control the engine via push buttons on the front panel. The module is used to start and stop the engine and indicate fault conditions, automatically shutting down the engine and giving a true first up fault condition of an engine failure.

Standard Control Function

- Manual Engine Control Module
- Low Oil Pressure
- High Engine Temperature
- Auxiliary Shutdown
- Overspeed Protection
- Protection hold-off timer
- Charge Failure warning

4 Overall Dimensions

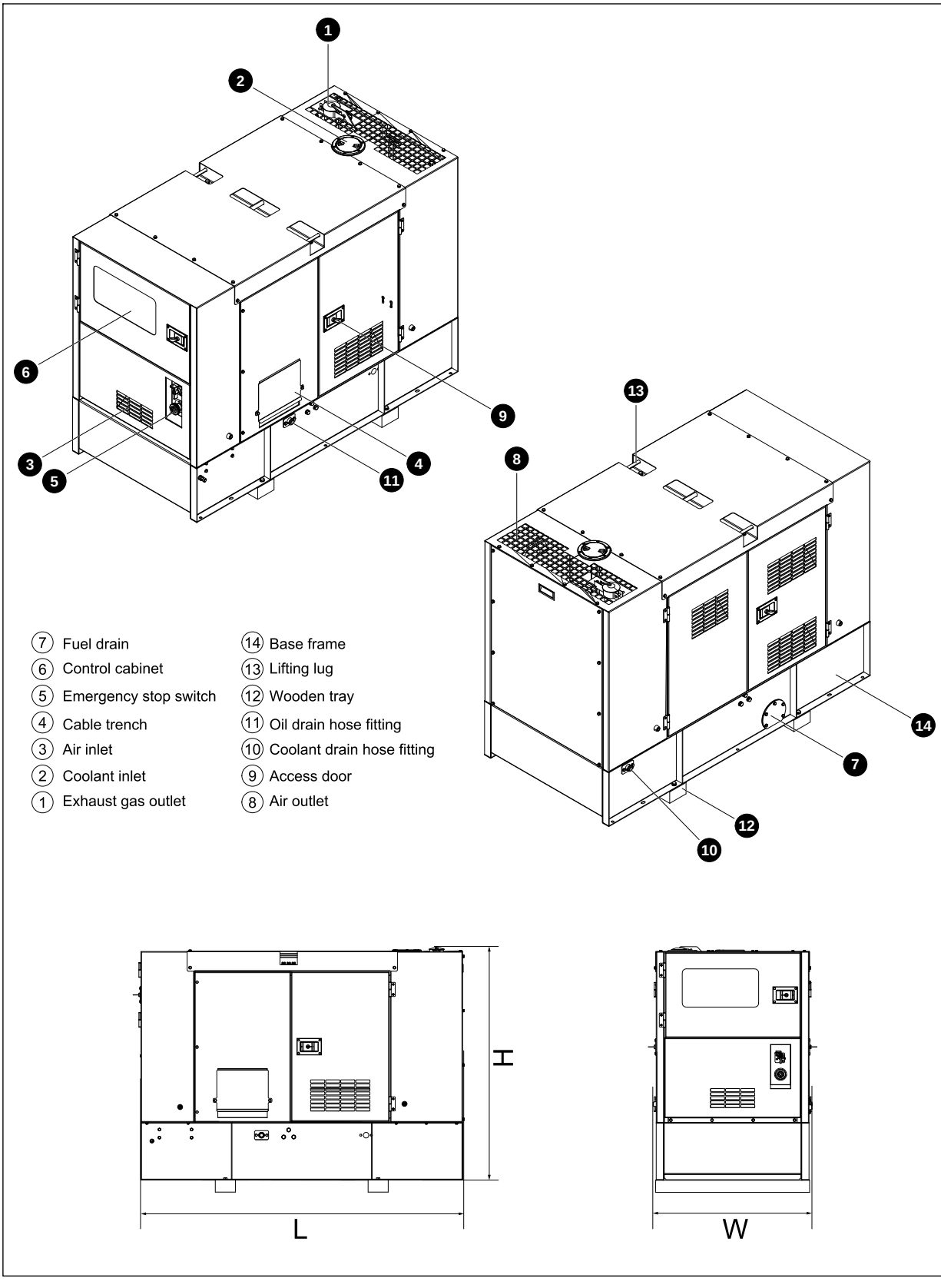

7 Fuel drain	14 Base frame
6 Control cabinet	13 Lifting lug
5 Emergency stop switch	12 Wooden tray
4 Cable trench	11 Oil drain hose fitting
3 Air inlet	10 Coolant drain hose fitting
2 Coolant inlet	9 Access door
1 Exhaust gas outlet	8 Air outlet

5 Control System

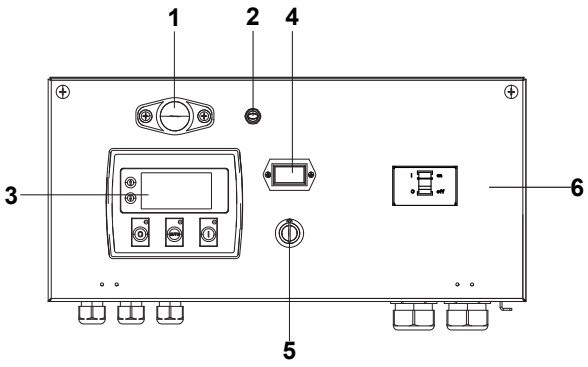

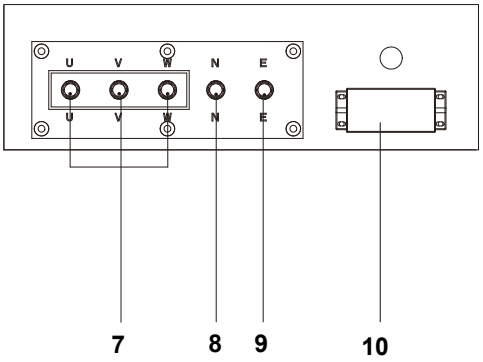

Control & field wiring cabinet

Ref.	Description
1	Control cabinet lamp
2	Control cabinet lamp switch
3	Control module
4	Time counter
5	Key switch
6	Main circuit breaker
7	Live wire terminals
8	Neutral wire terminal
9	Ground wire terminal
10	Mains input/remote communication connector

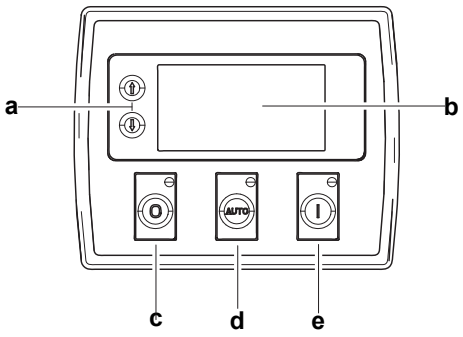

Control module

Ref.	Description
a	Navigation button£» Accept (Configuration mode only)
b	Main status display
c	Stop/reset button£» Next page (Configuration mode only)
d	Auto start button£» Decrease value/next item (Configuration mode only)
e	Start button£» Increase value/next item (Configuration mode only)

SPECIFICATION

VR SERIES DIESEL GENSET

VR40X6S

Revision: A2 (12/22)

To inquire the latest revision of document, visit our website at: www.powerlinkworld.com

