POWERLINK
Power Systems

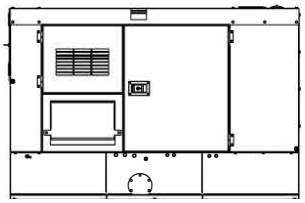

Generator set

Sound-proof type

QSV440CS

SPECIFICATIONS

www.powerlinkworld.com

MC series
QSV440CS

50 Hz @ 1500rpm,3-phase/4-wiring

1 Standards & Conditions

Design Standards

The designs and the productions are in conformity with:

- Conformite Europeenne (CE)
- ISO8528-5:2005
- GB/T2820.5-2009

.

Environmental Operating Conditions

- Installation place: Outdoors or indoors (well ventilated).
- Ambient temperature: -25℃ to 50℃.The coolant heater is needed when the temperature is below 5℃
- Humidity: Less than 90%.
- Altitude: Below one thousand (1000) meters above sea level.

Factory Inspection

- Inspection items.
- Protection devices working test.
- Starting ability in normal temperature.
- 50% rated power load moment capability.
- Voltage deviation and speed variation: 0%, 25%, 50%, 75%, 100%, 110% Load.

Painting Process

- Painting process specifications and colors are based on the manufacturer's standard.
- The customer could also choose the color which the manufacturer offers.

2 General Features

- Cummins engine QSZ13-G2
- Close coupled to Stamford alternator S4L1D-G4
- Microprocessor control module PLC-920
- Main circuit breaker: 630A
- Rotate speed governor: Electrical governor
- Excitation system: Self excited,SHUNT
- A.V.R model: AS440
- Key switch
- Emergency stop switch
- ATS(automatic transfer switch)receptacle
- Remote run connector
- 2x12V/120AH sealed for life maintenance free battery
- Lockable battery isolator switch
- Powder coated canopy
- 45℃ radiator
- Steel base frame
- Vibration isolators between the engine/alternator and base frame
- Dry type air filter
- Base fuel tank for 8 hours running
- Drain points for fuel tank
- Operation Manual / Specifications

3 Equipment

General technical data

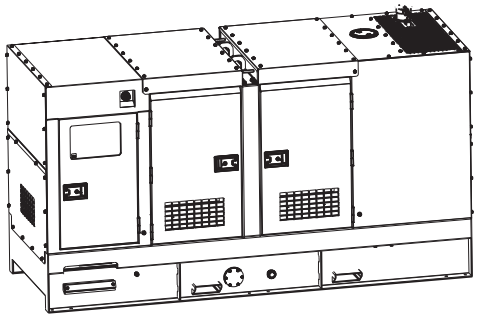

Model..... QSV440CS

Fuel tank.....750L

Dry weight.....4600kg

Sound pressure level @ 7m 74.0dBA

Dimensions L×W×H.....3950x1300x1980mm

Standby Power 468kVA/375kW

Prime Power 438kVA/350kW

Voltage	380V		400V		415V	
Ampere	665.5A		632.2A		609.4A	
Genset Fuel Consumption						
Frequency/Load	25%	50%	75%	100%	110%	
50Hz (L/h)	23.6	44.2	65.6	88.8	98.7	

Power System

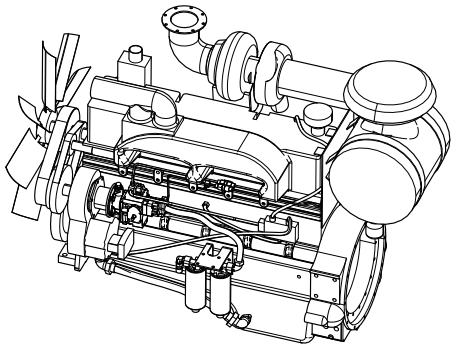

Engine Manufacturer/Brand.....Cummins
Engine Model..... QSZ13-G2
Dimensions L×W×H.....1396×1049x1232mm
Dry Weigh (approx.) 1245kg
Number of Cylinders.....6
Bore 130mm
Stroke 163mm
Displacement.....13L
Compression Ratio 17
Type of injection..... Direct injection
Intake System..... Turbocharged,air-to-air charged cooled
Intake Resistance ..... ≤6.2KPa
Cooling System .....Water cooled
Fan ..... Pusher
Battery Voltage 24V
Type of Fuel..... No.2 or ASTM D975
Type of Oil .....Class CH-4 oil as per API classification
Oil Capacity 45.4L
Type of Coolant ..... Glycol mixture
Coolant Capacity 23.1L
Back Pressure ..... ≤13KPa
Standby Power 589kW
Prime Power 536kW

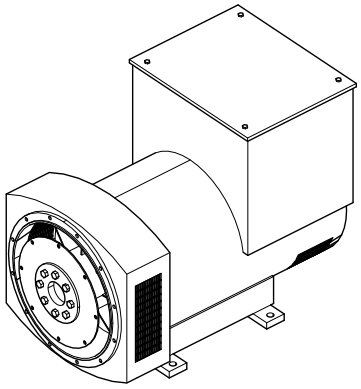

Alternator Manufacturer/Brand ..... Stamford
Alternator Model S4L1D-G4
Exciter.....Brushless
Cooling Fan ..... Cast alloy aluminum
Windings.....100% copper
Insulation Class ..... H
Winding Pitch.....2/3
Terminals 12
Drip Proof IP23
Altitude.....≤1000m
Overspeed 2250rpm
Air Flow.....N/A
Voltage Regulation .....±1.0%
Total Harmonic TGH / THCat no load < 1.5 % - on load < 5%
Telephone Interference..... THF<2%;TIF<50

PLC-920 Control System

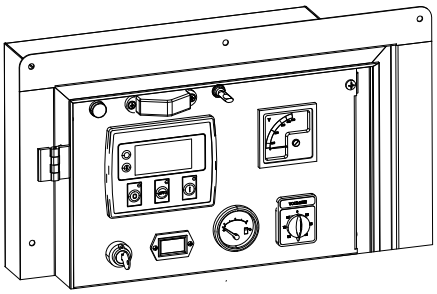

PLC-920 is an advanced control module based on microprocessor designed to control the engine via push buttons on the front panel. The module is used to start and stop the engine and indicate fault conditions, automatically shutting down the engine and giving a true first up fault condition of an engine failure.

Standard Control Function

- Manual Engine Control Module
- Low Oil Pressure
- High Engine Temperature
- Auxiliary Shutdown
- Overspeed Protection
- Protection hold-off timer
- Charge Failure warning

4 Overall Dimensions

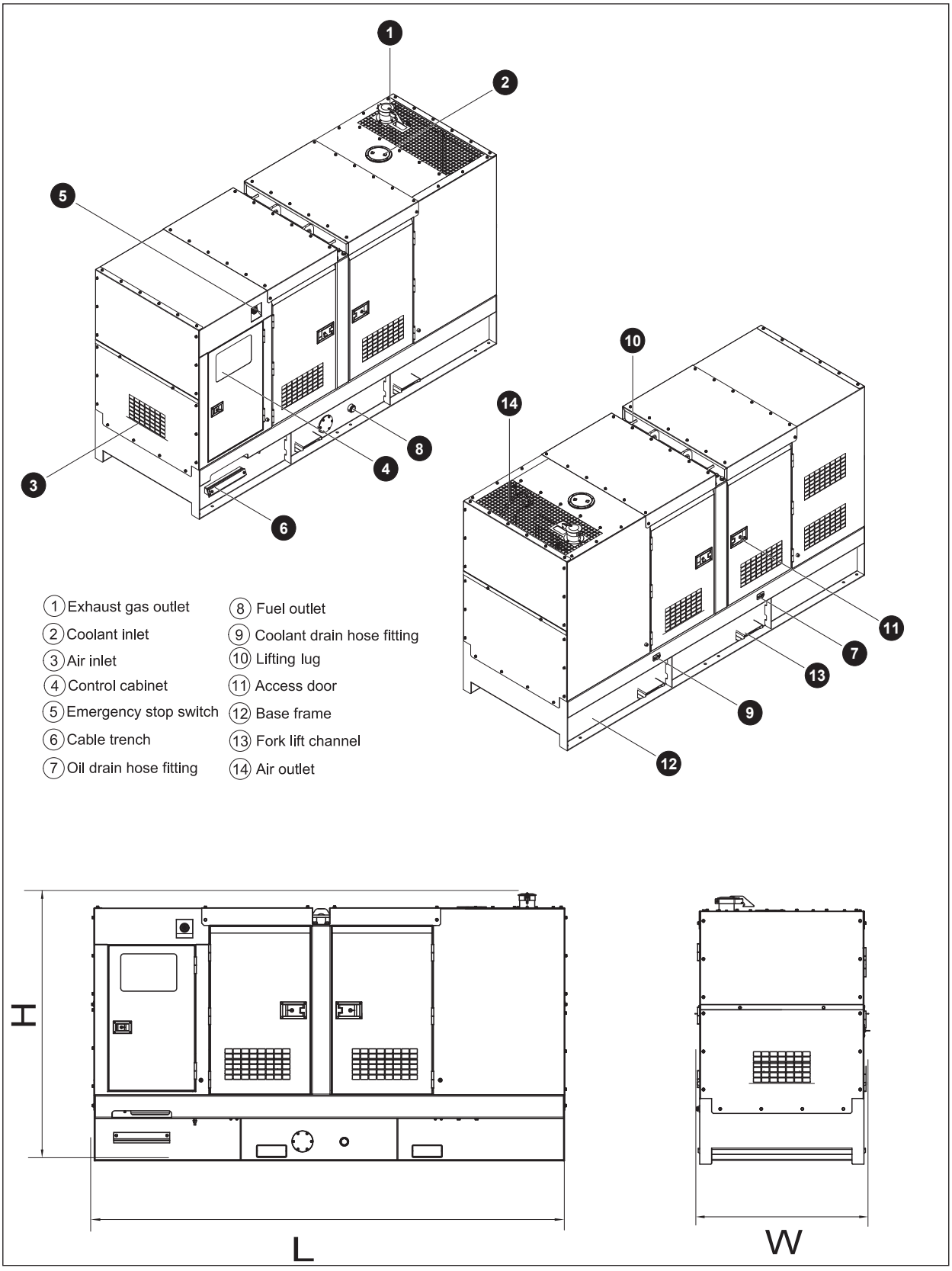

5 Control System

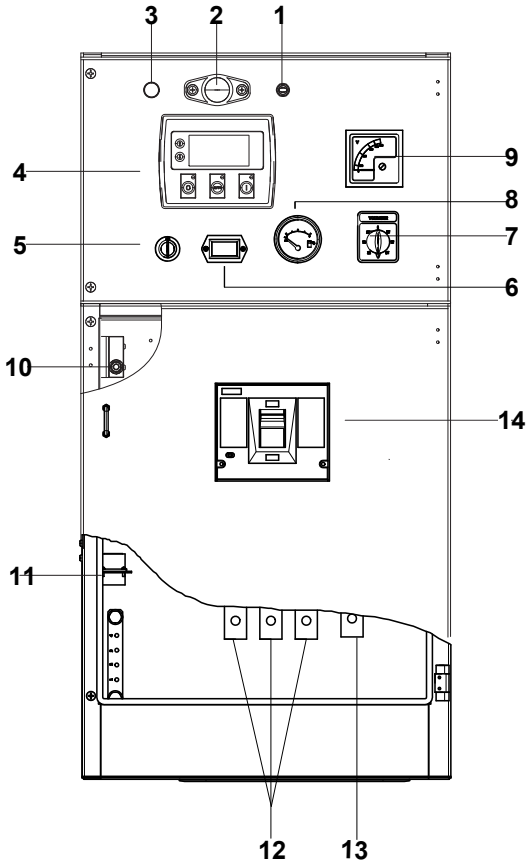

Control & field wiring cabinet

Ref.	Description
1	Control cabinet lamp switch
2	Control cabinet lamp
3	Charge indicator
4	Control module
5	Key switch
6	Time counter
7	Voltage changer-over switch
8	Fuel level meter
9	Voltage meter
10	Limit switch
11	Mains input/Remote control/ATS connector
12	Live wire terminal
13	Neutral wire terminal
14	Main circuit breaker

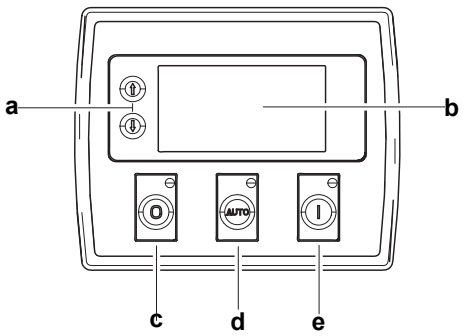

Control module

Ref.	Description
a	Navigation button£» Accept (Configuration mode only)
b	Main status display
c	Stop/reset button£» Next page (Configuration mode only)
d	Auto start button£» Decrease value/next item (Configuration mode only)
e	Start button£» Increase value/next item (Configuration mode only)

1000033655-A2-E
10.2020

Specification may change without prior notice. For more info., contact Power Link or your local distributors please.

©2020 POWERLINK