POWERLINK
Power Systems

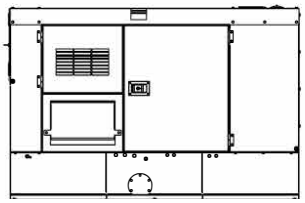

Generator set

Sound-proof type

QSV60CS

SPECIFICATIONS

www.powerlinkworld.com

MC series
QSV60CS

50 Hz @ 1500rpm,3-phase/5-wiring

1 Standards & Conditions

Design Standards

The designs and the productions are in conformity with:

- Conformite Europeenne (CE)
- ISO8528-5:2005
- GB/T2820.5-2009

.

Environmental Operating Conditions

- Installation place: Outdoors or indoors (well ventilated).
- Ambient temperature: -25℃ to 50℃.The coolant heater is needed when the temperature is below 5℃
- Humidity: Less than 90%.
- Altitude: Below one thousand (1000) meters above sea level.

Factory Inspection

- Inspection items.
- Protection devices working test.
- Starting ability in normal temperature.
- 50% rated power load moment capability.
- Voltage deviation and speed variation: 0%, 25%, 50%, 75%, 100%, 110% Load.

Painting Process

- Painting process specifications and colors are based on the manufacturer's standard.
- The customer could also choose the color which the manufacturer offers.

2 General Features

- Cummins engine 4BTA3.9-G2
- Close coupled to Stamford alternator S1L2-Y1
- Microprocessor control module PLC-920
- Main circuit breaker: 125A
- Rotate speed governor: Electrical governor
- Excitation system: Self excited,SHUNT
- A.V.R model: AS480
- Key switch
- Emergency stop switch
- ATS(automatic transfer switch)receptacle
- Remote run connector
- 1x12V/120AH sealed for life maintenance free battery
- Lockable battery isolator switch
- Powder coated canopy
- 45℃ radiator
- Steel base frame
- Vibration isolators between the engine/alternator and base frame
- Dry type air filter
- Base fuel tank for 9 hours running
- Drain points for fuel tank
- Operation Manual / Specifications

3 Equipment

General technical data

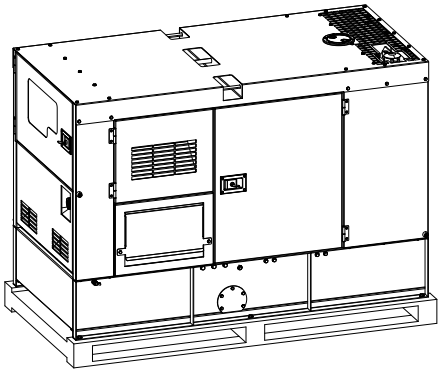

Model.....QSV60CS

Fuel tank.....120L

Dry weight.....1400kg

Sound pressure level @ 7m 62.0dBA

Dimensions L×W×H.....2300x970x1500mm

Standby Power 66kVA/53kW

Prime Power 60kVA/48kW

Voltage	380V		400V		415V
Ampere	91.2A		86.6A		83.5A
Genset Fuel Consumption					
Frequency/Load	25%	50%	75%	100%	110%
50Hz (L/h)	3.3	6.5	10	12.9	14.2

Power System

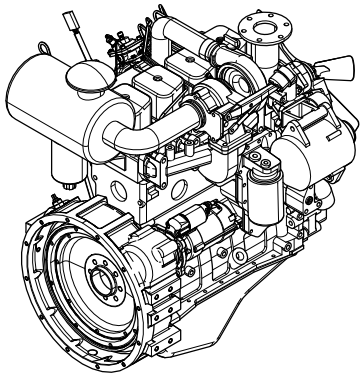

Engine Manufacturer/Brand.....Cummins
Engine Model.....4BTA3.9-G2
Dimensions L×W×H.....884.9*748.4*985.6
Dry Weigh (approx.) 350kg
Number of Cylinders.....4
Bore 102mm
Stroke 120mm
Displacement.....3.9L
Compression Ratio 16.5
Type of injection..... Direct injection
Intake System.....Turbocharged,water-to-air charge cooled
Intake Resistance .....≦ 6.28kPa
Cooling System .....Water cooled
Fan ..... Pusher
Battery Voltage 12/24V
Type of Fuel.....Diesel
Type of Oil 15W40-CF4
Oil Capacity 10.9L
Type of Coolant .....Glycol mixture
Coolant Capacity 8.3L
Back Pressure .....≦10.1kPa
Standby Power 55kW
Prime Power 50kW

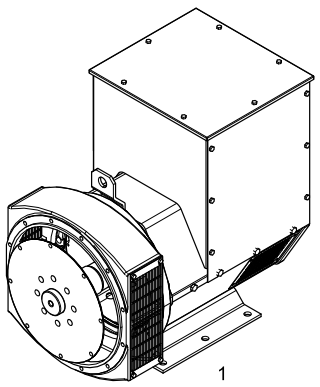

Alternator Manufacturer/Brand ..... Stamford
Alternator Model S1L2-Y1
Exciter.....Brushless
Cooling Fan ..... Cast alloy aluminum
Windings.....100% copper
Insulation Class ..... H
Winding Pitch.....2/3
Terminals 12
Drip Proof IP23
Altitude.....≤1000m
Overspeed 2250rpm
Air Flow.....N/A
Voltage Regulation .....±1.0%
Total Harmonic TGH / THCat no load < 1.5 % - on load < 5%
Telephone Interference..... THF<2%;TIF<50

PLC-920 Control System

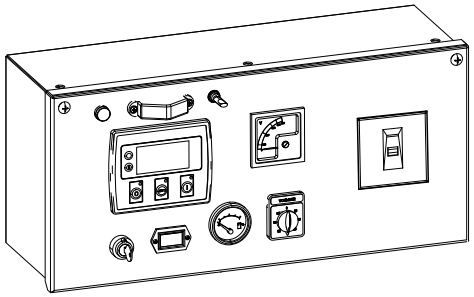

PLC-920 is an advanced control module based on microprocessor designed to control the engine via push buttons on the front panel. The module is used to start and stop the engine and indicate fault conditions, automatically shutting down the engine and giving a true first up fault condition of an engine failure.

Standard Control Function

- Manual Engine Control Module
- Low Oil Pressure
- High Engine Temperature
- Auxiliary Shutdown
- Overspeed Protection
- Protection hold-off timer
- Charge Failure warning

4 Overall Dimensions

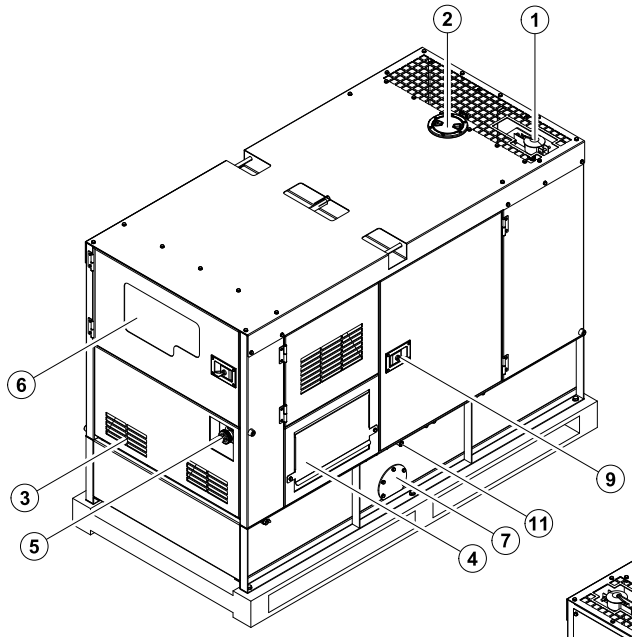

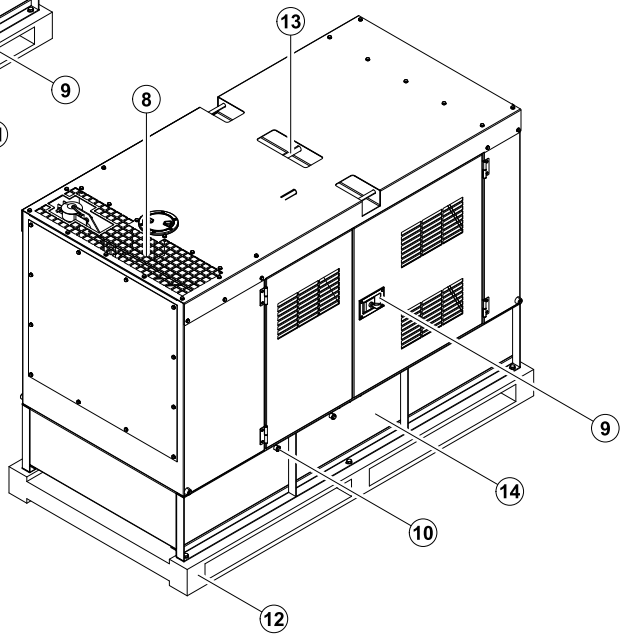

7 Fuel drain	14 Base frame
6 Control cabinet	13 Lifting lug
5 Emergency stop switch	12 Wooden tray
4 Cable trench	11 Oil drain hose fitting
3 Air inlet	10 Coolant drain hose fitting
2 Coolant inlet	9 Access door
1 Exhaust gas outlet	8 Air outlet

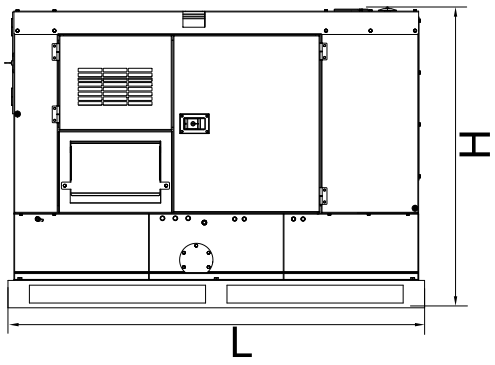

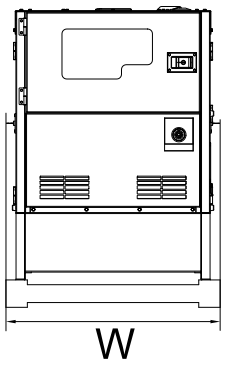

5 Control System

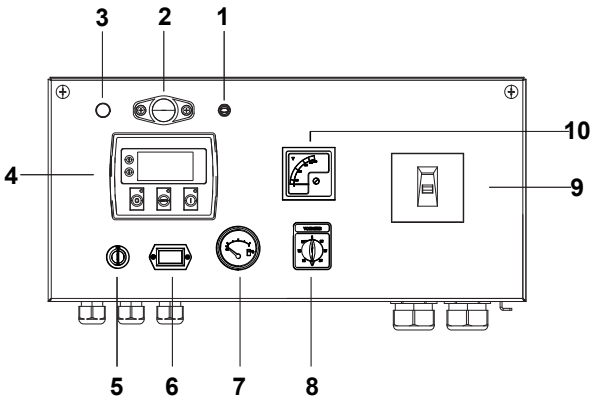

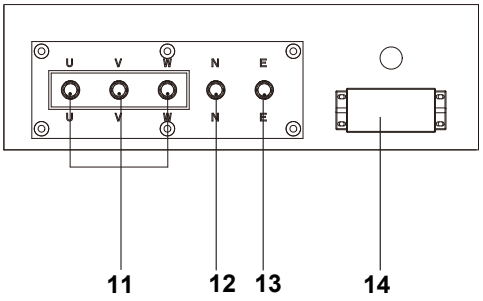

Control & field wiring cabinet

Ref.	Description
1	Control cabinet lamp switch
2	Control cabinet lamp
3	Charge indicator
4	Control module
5	Key switch
6	Time counter
7	Fuel level meter
8	Voltage change-over switch
9	Main circuit breaker
10	Voltage meter
11	Live wire terminals
12	Neutral wire terminal
13	Ground wire terminal
14	Mains input/remote communication connector

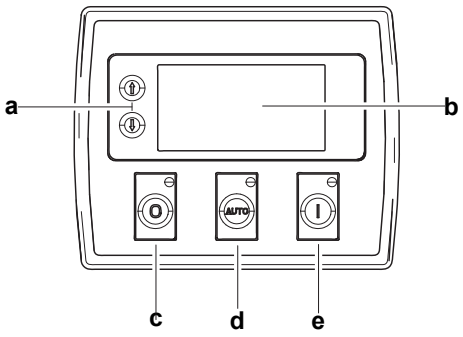

Control module

Ref.	Description
a	Navigation button£» Accept (Configuration mode only)
b	Main status display
c	Stop/reset button£» Next page (Configuration mode only)
d	Auto start button£» Decrease value/next item (Configuration mode only)
e	Start button£» Increase value/next item (Configuration mode only)

1000033644-A2-E
10.2020

Specification may change without prior notice. For more info., contact Power Link or your local distributors please.

©2020 POWERLINK